DocuSign Envelope ID: 417F13A2-7A3B-4EA8-A2E0-83C88D96BF3E

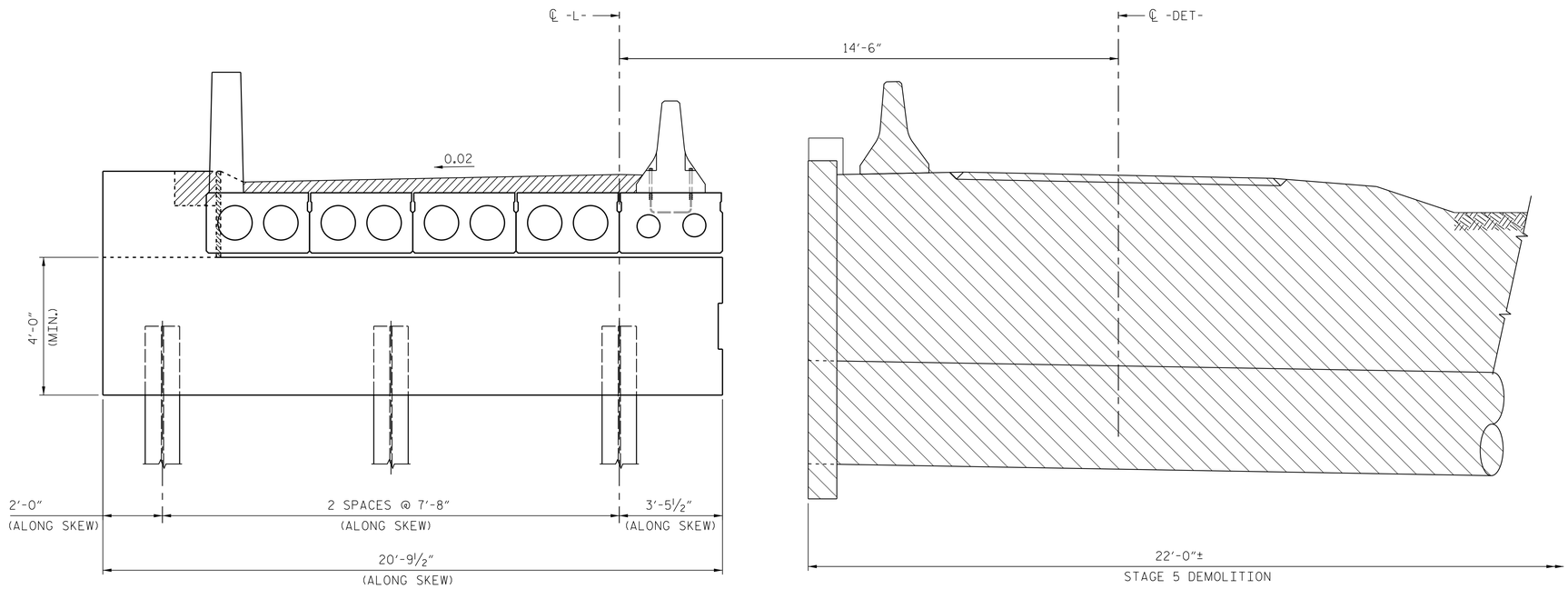

STAGE 5

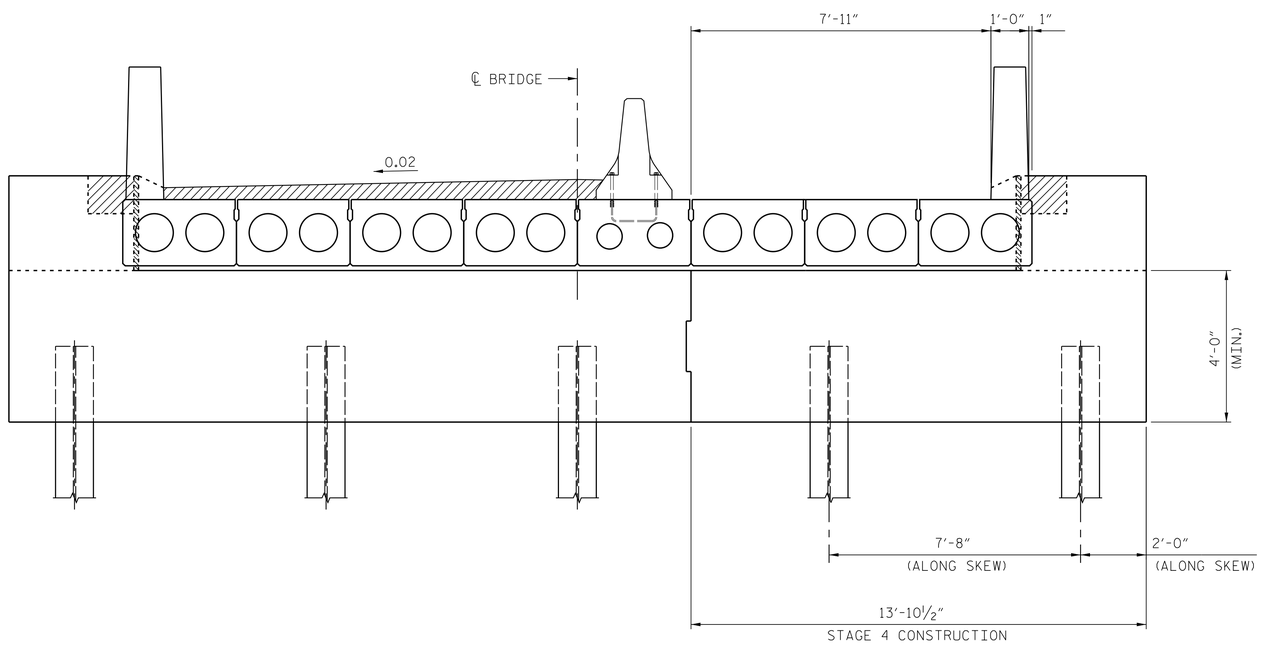

STAGE 6

PROJECT NO. 17BP.14.R.62

JACKSON COUNTY

STATION: 13+09.50 -L-

SHEET 3 OF 4

AECOM
AECOM TECHNICAL SERVICES, INC.
701 CORPORATE CENTER DRIVE, SUITE 475
RALEIGH, NC 27607
(919) 854-6200 www.aecom.com
AECOM License No. F-0342

7/5/2016

NORTH CAROLINA PROFESSIONAL SEAL 030474 ENGINEER JOHN C. MORRISON

DocuSigned by: John C. Morrison
A2FDE142C82F4AB...

STATE OF NORTH CAROLINA
DEPARTMENT OF TRANSPORTATION
RALEIGH

BRIDGE CONSTRUCTION STAGING FOR MAINTENANCE OF TRAFFIC

REVISIONS						SHEET NO.
NO.	BY:	DATE:	NO.	BY:	DATE:	S-06
						TOTAL SHEETS

DRAWN BY : MTB DATE : 06/16
CHECKED BY : JCM DATE : 06/16

DOCUMENT NOT CONSIDERED FINAL UNLESS ALL SIGNATURES COMPLETED

DATE: 7/5/2016
TIME: 3:51:14 PM

USER: mcrrisonc
DGN: GA6023BTT2x400_Tech_Info_Disc_Files\450_NCDOT Std Tech Def Files\BRG_135\Structures\40_035_B35_S06_SE003.dgn