DocuSign Envelope ID: 417F13A2-7A3B-4EA8-A2E0-83C88D96BF3E

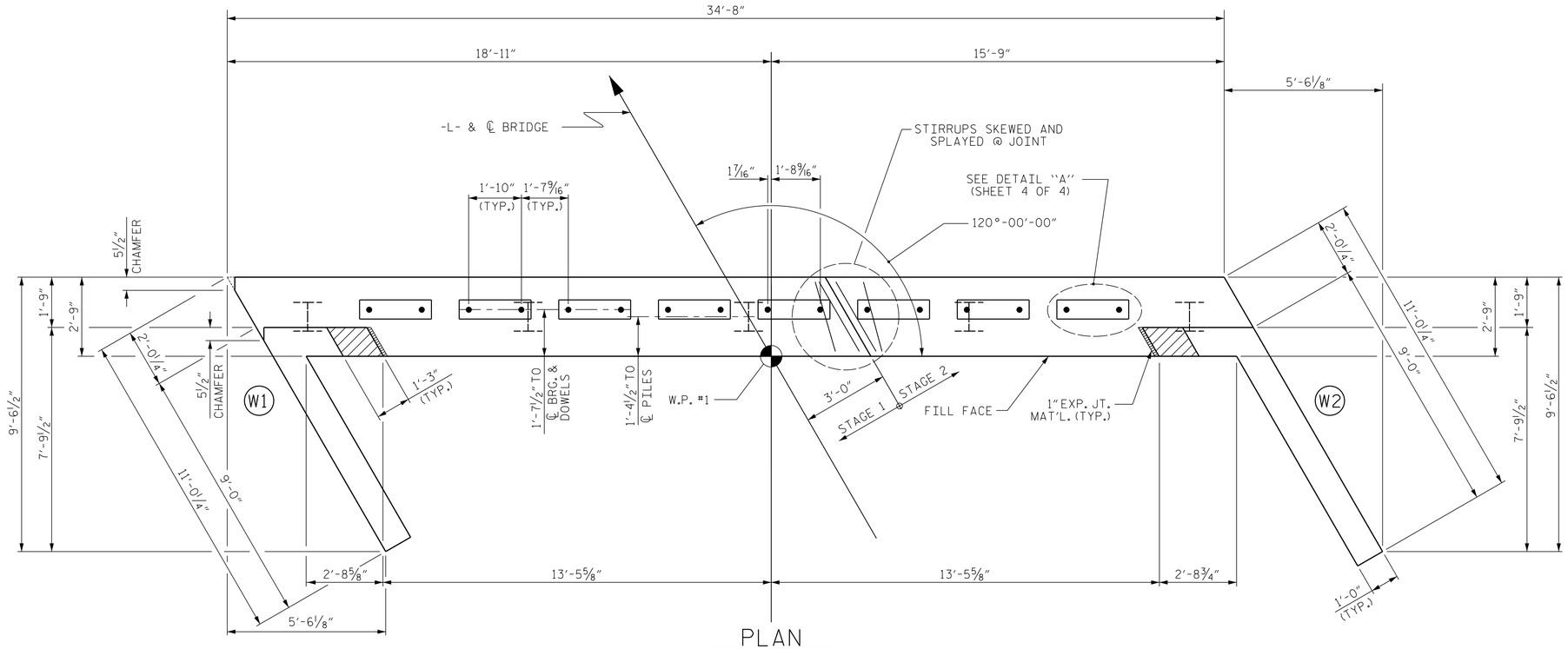

PLAN

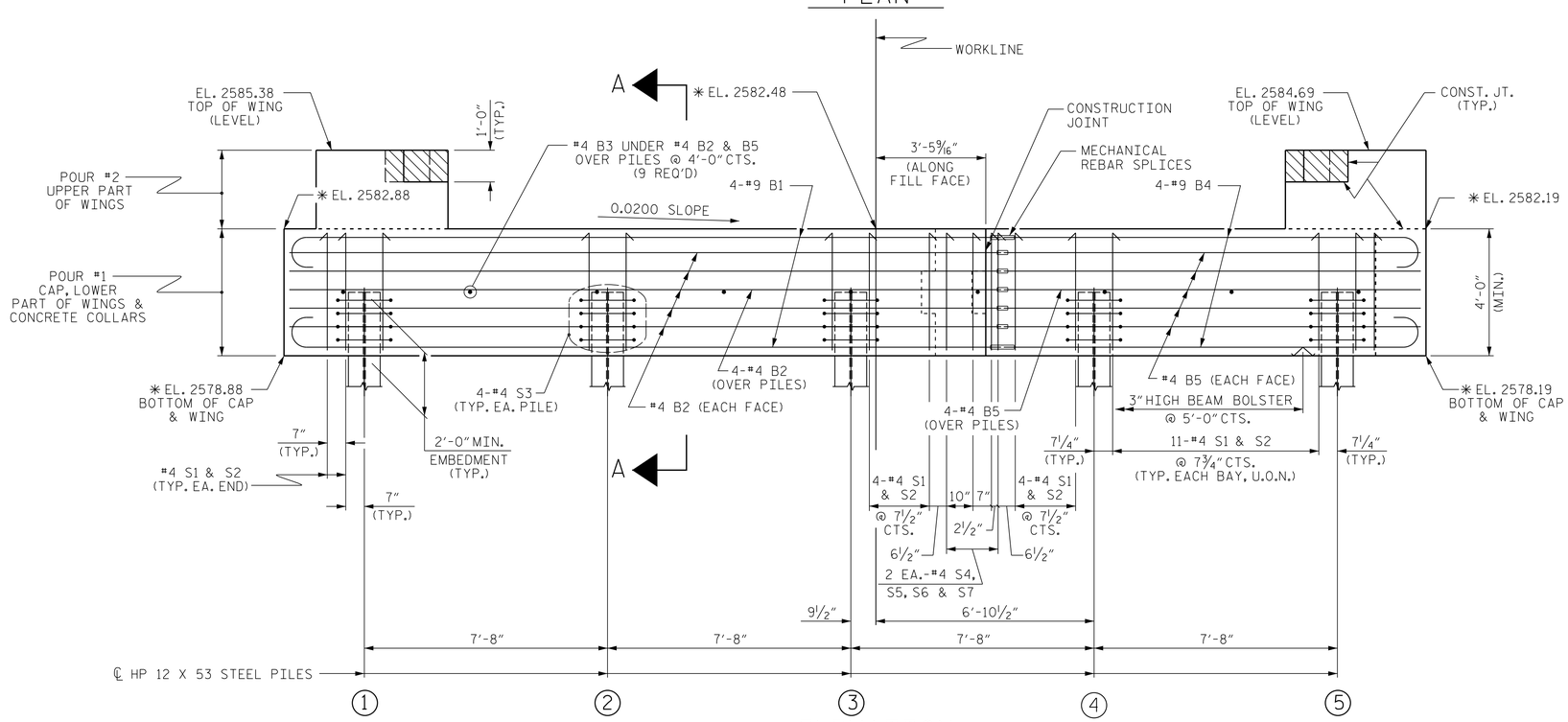

ELEVATION

WINGS NOT SHOWN FOR CLARITY.
FOR SECTION A-A, SEE SHEET 4 OF 4.
CONCRETE COLLARS FOR STEEL PILES NOT SHOWN IN PLAN AND ELEVATION VIEWS FOR CLARITY.
SEE "CORROSION PROTECTION FOR STEEL PILES DETAIL", SHEET 4 OF 4.

NOTES

STIRRUPS IN CAP MAY BE SHIFTED AS NECESSARY TO CLEAR DOWELS.

THE CONCRETE IN THE SHADED AREA OF THE WING SHALL BE POURED AFTER THE VERTICAL CONCRETE BARRIER RAIL IS CAST IF SLIP FORMING IS USED.

FOR PILE SPLICE DETAILS, SEE SHEET 4 OF 4.

FOR WING DETAILS, SEE SHEET 3 OF 4.

FOR FOUNDATION NOTES, SEE "GENERAL DRAWING, SHEET 2 OF 2".

FOR MECHANICAL SPLICES, SEE SECTION 425-5(B) OF THE STANDARD SPECIFICATIONS.

TOP OF PILE ELEVATIONS	
1	2580.84
2	2580.69
3	2580.54
4	2580.38
5	2580.23

✳ ELEVATIONS PROJECTED ALONG ℄ BEARINGS.

PROJECT NO. 17BP.14.R.62

JACKSON COUNTY

STATION: 13+09.50 -L-

SHEET 1 OF 4

AECOM
AECOM TECHNICAL SERVICES, INC.
701 CORPORATE CENTER DRIVE, SUITE 475
RALEIGH, NC 27607
(919) 854-6200 www.aecom.com
AECOM License No. F-0342

7/5/2016

NORTH CAROLINA PROFESSIONAL SEAL 030474 ENGINEER JOHN C. MORRISON

AJFDE142C82F4AB...

STATE OF NORTH CAROLINA
DEPARTMENT OF TRANSPORTATION
RALEIGH

SUBSTRUCTURE

END BENT No. 1

REVISIONS						SHEET NO.
NO.	BY:	DATE:	NO.	BY:	DATE:	S-13
1			3			TOTAL SHEETS
2			4			

ASSEMBLED BY :	MTB	DATE :	06/16
CHECKED BY :	JCM	DATE :	06/16
DRAWN BY : WJH	12/11	REV. 4/15	MAA/TMG
CHECKED BY : AAC	12/11		

DOCUMENT NOT CONSIDERED FINAL UNLESS ALL SIGNATURES COMPLETED

MODIFIED STD. NO. EB_27.120S4

USER: morrisonc
DGN: G:\60238172\400_Tech_Info_DSc_Files\450_NCDOT Std Text Dsgn Files\BRG_135\Structures\401_070_B135_S13_EB01.dgn
DATE: 7/5/2016 TIME: 4:01:22 PM
DATE: 7/5/2016 TIME: 4:01:22 PM