DocuSign Envelope ID: 417F13A2-7A3B-4EA8-A2E0-83C88D96BF3E

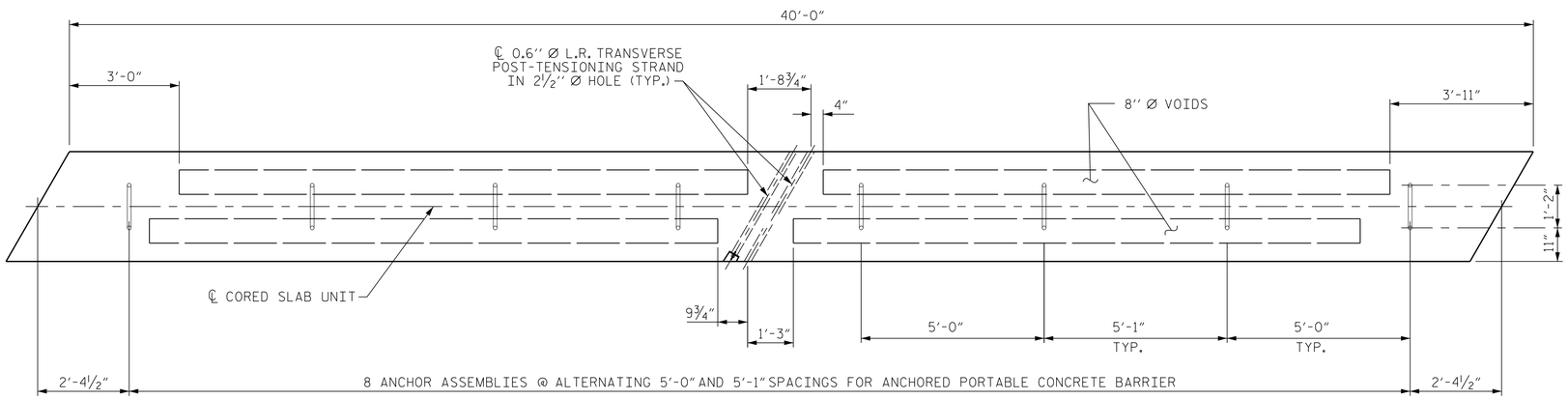

PLAN OF CORED SLAB UNIT #5

(SHOWING LOCATION OF ANCHOR ASSEMBLIES)

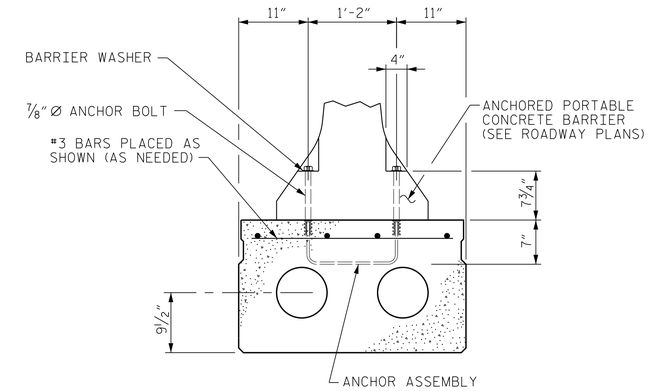

SECTION - CORED SLAB UNIT #5

(SHOWING PLACEMENT OF ANCHOR ASSEMBLY)

THE #3 BARS ARE INCIDENTAL AND THEIR COST SHALL BE INCLUDED IN THE PRICE BID FOR THE PRESTRESSED CONCRETE CORED SLAB

ANCHOR ASSEMBLY NOTES:

THE ANCHOR ASSEMBLY FOR PORTABLE CONCRETE BARRIER SHALL CONSIST OF THE FOLLOWING COMPONENTS:

A. FERRULES SHALL BE MADE FROM STEEL MEETING THE REQUIREMENTS OF AASHTO M169, GRADE 12L14 AND SHALL HAVE A MINIMUM LENGTH OF THREADS OF 2½".

B. 2- ⅞" Ø x 1'-0" ANCHOR BOLTS SHALL CONFORM TO THE REQUIREMENTS OF ASTM A307. ANCHOR BOLTS SHALL BE GALVANIZED. AT THE CONTRACTOR'S OPTION, STAINLESS STEEL BOLTS MAY BE USED AS AN ALTERNATE FOR THE ⅞" Ø x 1'-0" GALVANIZED BOLTS. THEY SHALL CONFORM TO OR EXCEED THE MECHANICAL REQUIREMENTS OF ASTM A307. THE USE OF THIS ALTERNATE SHALL BE APPROVED BY THE ENGINEER.

C. WIRE STRUTS SHOWN IN THE ANCHOR ASSEMBLY DETAIL ARE MINIMUM ALLOWABLE SIZE AND SHALL HAVE A MINIMUM TENSILE STRENGTH OF 100,000 P.S.I.

ANCHOR ASSEMBLY WITH BOLTS SHALL ASSEMBLED IN THE SHOP. BOLT THREADS MAY BE RECUT AS NECESSARY TO INSURE FIT.

THE COST OF THE ANCHOR ASSEMBLY COMPLETE IN PLACE, SHALL BE INCLUDED, AS APPLICABLE, IN THE UNIT CONTRACT PRICE BID FOR 3'-0" x 1'-9" PRESTRESSED CONCRETE CORED SLAB OR LUMP SUM FOR THE APPROACH SLABS.

FERRULES TO BE PLUGGED DURING CASTING OF THE CORED SLAB UNITS OR POURING OF THE APPROACH SLABS AS RECOMMENDED BY THE MANUFACTURER.

AT THE CONTRACTOR'S OPTION, FERRULES WITH OPEN OR CLOSED ENDS MAY BE USED.

FOR 4" x 3½" x ½" BARRIER WASHER TO BE USED WITH THE ANCHOR ASSEMBLY, SEE ROADWAY PLANS.

PAYMENT FOR THE ANCHORED PORTABLE CONCRETE BARRIER AND BARRIER WASHER ARE INCLUDED IN THE TRAFFIC CONTROL PLANS.

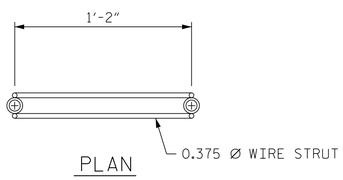

PLAN

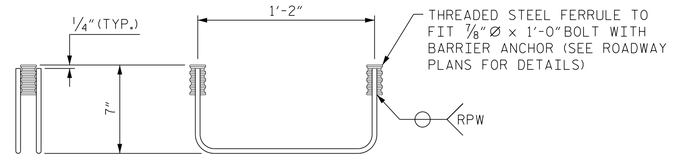

SIDE VIEW ELEVATION

ANCHOR ASSEMBLY FOR ANCHORED PORTABLE CONCRETE BARRIER

(8 ASSEMBLIES REQUIRED IN CORED SLAB UNIT #5)
(4 ASSEMBLIES REQUIRED IN APPROACH SLABS)

PROJECT NO. 17BP.14.R.62

JACKSON COUNTY

STATION: 13+09.50 -L-

SHEET 3 OF 4

AECOM
AECOM TECHNICAL SERVICES, INC.
701 CORPORATE CENTER DRIVE, SUITE 475
RALEIGH, NC 27607
(919) 854-6200 www.aecom.com
AECOM License No. F-0342

7/5/2016

NORTH CAROLINA PROFESSIONAL SEAL 030474 ENGINEER JOHN C. MORRISON

DocuSigned by: John C. Morrison
A2FDE142C82F4AB...

STATE OF NORTH CAROLINA
DEPARTMENT OF TRANSPORTATION
RALEIGH

3'-0'' X 1'-9''
PRESTRESSED CONCRETE
CORED SLAB UNIT
120° SKEW

REVISIONS						SHEET NO.
NO.	BY:	DATE:	NO.	BY:	DATE:	S-10
						TOTAL SHEETS

DOCUMENT NOT CONSIDERED FINAL UNLESS ALL SIGNATURES COMPLETED

DRAWN BY : MTB DATE : 06/16
CHECKED BY : JCM DATE : 06/16

DATE: 7/5/2016
TIME: 3:59:22 PM

USER: mcrrisonc
DGN: GA6023BTT2x400_Tech_Info_Disc_Files\450_NCDOT Std Text Def Files\BRG_135\Structures\401_055_B135_S10_PC503.dgn