DocuSign Envelope ID: 417F13A2-7A3B-4EA8-A2E0-83C88D96BF3E

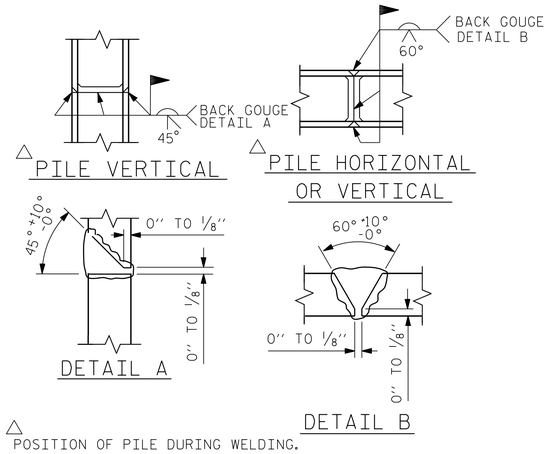

PILE SPLICE DETAILS

BAR TYPES

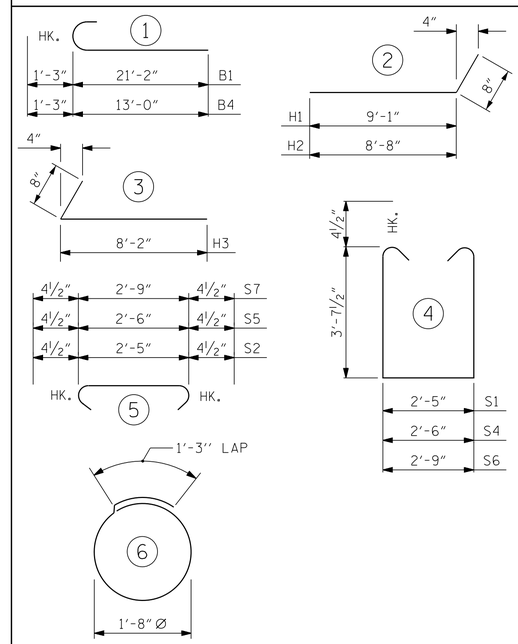

ALL BAR DIMENSIONS ARE OUT TO OUT.

END BENT No. 1		END BENT No. 2	
HP 12 X 53 STEEL PILES		HP 12 X 53 STEEL PILES	
NO: 5	LIN. FT.= 80	NO: 5	LIN. FT.= 80

BILL OF MATERIAL
FOR ONE END BENT

BAR	NO.	SIZE	TYPE	LENGTH	WEIGHT
B1	8	#9	1	22'-5"	610
B2	14	#4	STR	21'-2"	198
B3	9	#4	STR	2'-5"	15
B4	8	#9	1	14'-3"✳	388
B5	14	#4	STR	13'-0"✳	122
D1	16	#6	STR	1'-6"	36
H1	10	#4	2	9'-9"	65
H2	10	#4	2	9'-4"	62
H3	20	#4	3	8'-10"	118
K1	16	#4	STR	3'-3"	35
S1	45	#4	4	10'-5"	313
S2	45	#4	5	3'-2"	95
S3	20	#4	6	6'-6"	87
S4	2	#4	4	10'-6"	14
S5	2	#4	5	3'-3"	4
S6	2	#4	4	10'-9"	14
S7	2	#4	5	3'-6"	5
V1	53	#4	STR	6'-2"	218

REINFORCING STEEL (FOR ONE END BENT) 2399 LBS.

CLASS A CONCRETE BREAKDOWN (FOR ONE END BENT)

POUR #1 CAP, LOWER PART OF WINGS & COLLARS 17.3 C.Y.

POUR #2 UPPER PART OF WINGS 2.2 C.Y.

TOTAL CLASS A CONCRETE 19.5 C.Y.

✳ MECHANICAL COUPLERS ARE REQUIRED. ADJUST BAR LENGTHS AS NECESSARY FOR THE APPROVED SPLICE MECHANISM USED. FOR MECHANICAL SPLICES, SEE SECTION 425-5(B) OF THE STANDARD SPECIFICATIONS.

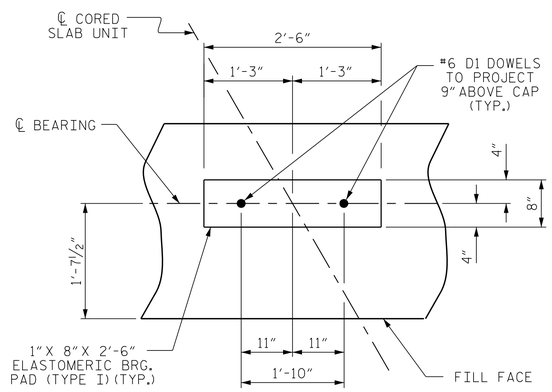

DETAIL "A"

(END BENT No. 1 SHOWN, END BENT No. 2 SIMILAR BY ROTATION)

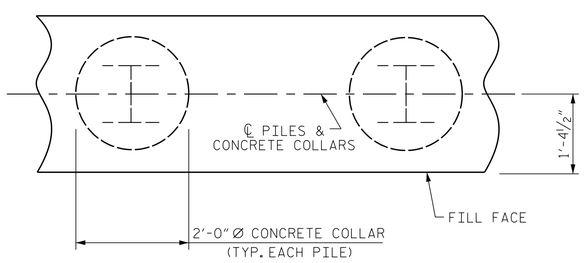

PLAN

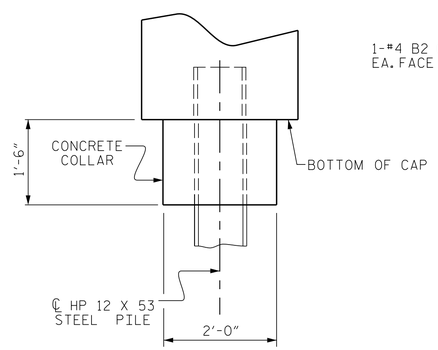

ELEVATION

CORROSION PROTECTION FOR STEEL PILES DETAIL

(END BENT No. 1 SHOWN, END BENT No. 2 SIMILAR BY ROTATION)

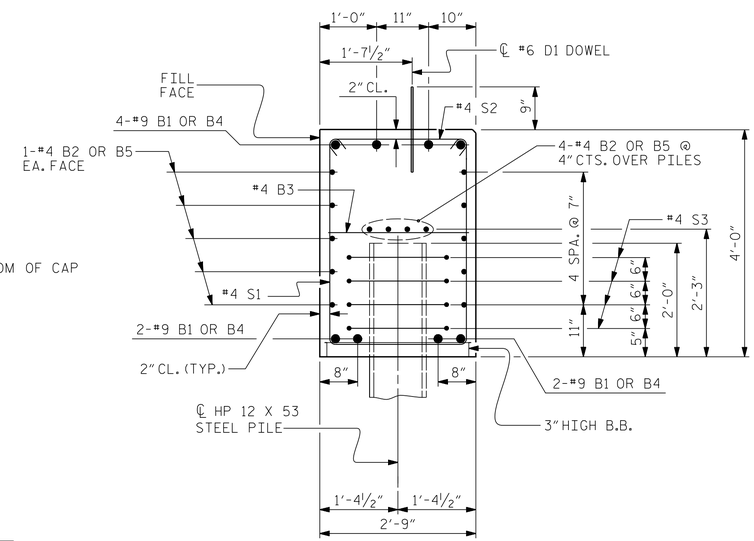

SECTION A-A

(CONCRETE COLLAR NOT SHOWN FOR CLARITY. SEE "CORROSION PROTECTION FOR STEEL PILES DETAIL.")

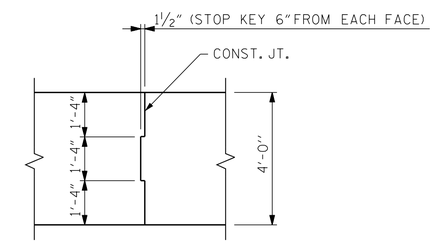

CONST. JT. DETAIL

PROJECT NO. 17BP.14.R.62

JACKSON **COUNTY**

STATION: 13+09.50 -L-

SHEET 4 OF 4

AECOM
AECOM TECHNICAL SERVICES, INC.
701 CORPORATE CENTER DRIVE, SUITE 475
RALEIGH, NC 27607
(919) 854-6200 www.aecom.com
AECOM License No. F-0342

7/5/2016

NORTH CAROLINA PROFESSIONAL SEAL 030474 ENGINEER JOHN C. MORRISON

DocuSign Envelope ID: A2FDE142C82F4AB...

STATE OF NORTH CAROLINA
DEPARTMENT OF TRANSPORTATION
RALEIGH

SUBSTRUCTURE

END BENT No. 1 & 2 DETAILS

REVISIONS						SHEET NO.
NO.	BY:	DATE:	NO.	BY:	DATE:	S-16
1			3			TOTAL SHEETS
2			4			

ASSEMBLED BY :	MTB	DATE :	06/16
CHECKED BY :	JCM	DATE :	06/16
DRAWN BY : WJH	12/11	REV. 4/15	MAA/TMG
CHECKED BY : AAC	12/11		

DOCUMENT NOT CONSIDERED FINAL UNLESS ALL SIGNATURES COMPLETED

MODIFIED STD. NO. EB_27_12OS4

USER: marrisonc
DGN: G:\GEOSERVE\2\400_Tech_Info_Doc_Files\450_NCDOT Staff and Best Files\BRG_135\Structures\40_085_B135_S46_EB04.dgn
CADRES 7 PLEASORING
TIMBRE: +4.8(35.5) PM