DocuSign Envelope ID: 417F13A2-7A3B-4EA8-A2E0-83C88D96BF3E

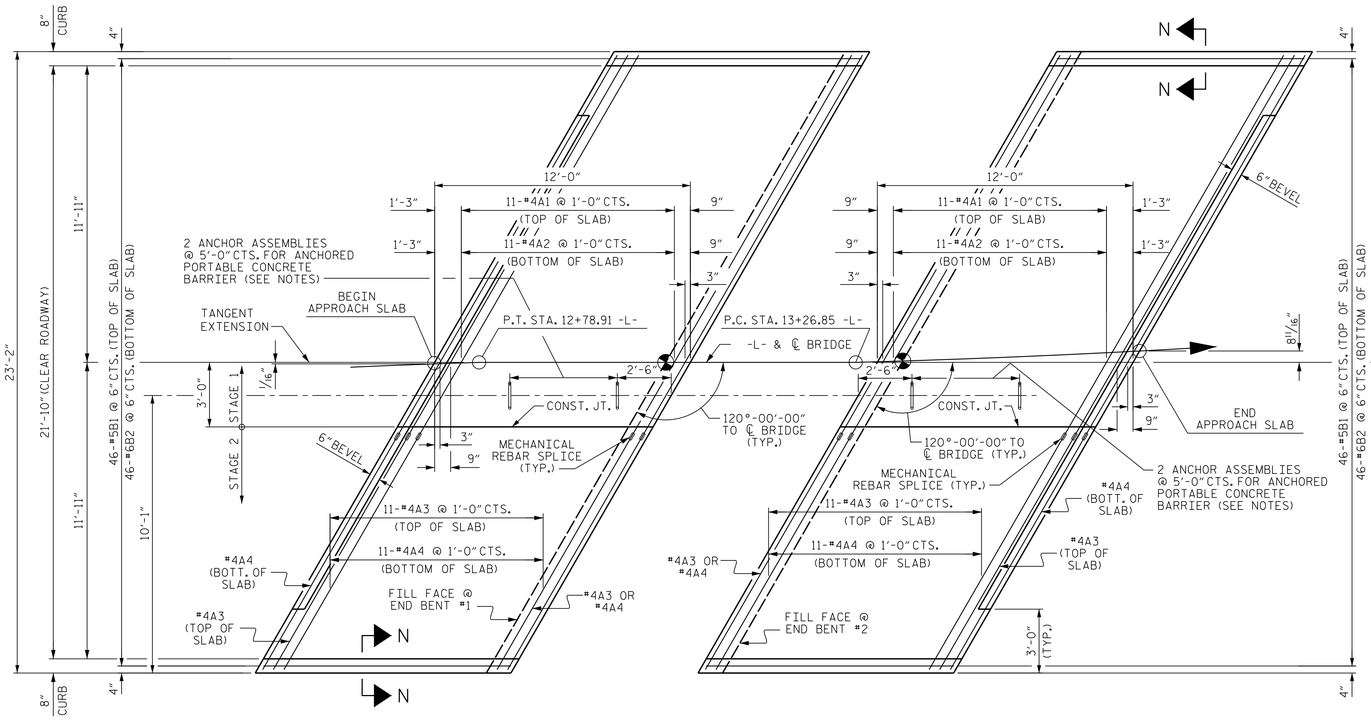

PLAN @ END BENT #1

PLAN @ END BENT #2

DIMENSIONS SHOWN ARE TYPICAL FOR BOTH APPROACH SLABS

NOTES

FOR BRIDGE APPROACH FILL INCLUDING GEOTEXTILE, 4" Ø DRAINAGE PIPE, AND #78M STONE BACKFILL, SEE ROADWAY PLANS.

GEOTEXTILE SHALL BE TYPE 1IN ACCORDANCE WITH THE STANDARD SPECIFICATIONS SECTION 1056.

#78M STONE BACKFILL (CLASS V SELECT MATERIAL) SHALL BE IN ACCORDANCE WITH STANDARD SPECIFICATIONS SECTION 1016.

#78M STONE BACKFILL IS TO BE CONTINUOUS ALONG FILL FACE OF BACKWALL FROM OUTSIDE EDGE TO OUTSIDE EDGE OF APPROACH SLAB.

AREA BETWEEN THE WINGWALL AND APPROACH SLAB SHALL BE GRADED TO DRAIN THE WATER AWAY FROM THE FILL FACE OF THE BRIDGE AND SHALL BE PAVED. SEE ROADWAY PLANS.

APPROACH SLAB GROOVING IS NOT REQUIRED.

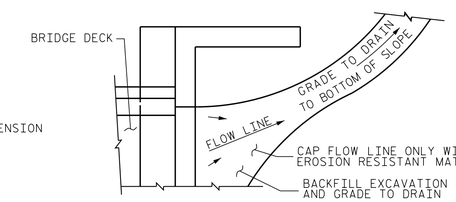

NOTE: IF THE APPROACH SLAB IS NOT CONSTRUCTED IMMEDIATELY AFTER THE BACKFILLING OF THE END BENT EXCAVATION, GRADE TO DRAIN TO THE BOTTOM OF THE SLOPE AND PROVIDE EROSION RESISTANT MATERIAL, SUCH AS FIBERGLASS ROVING OR AS DIRECTED BY THE ENGINEER TO PREVENT SOIL EROSION AND TO PROTECT THE AREA ADJACENT TO THE STRUCTURE. THE CONTRACTOR WILL BE REQUIRED TO REMOVE THESE MATERIALS PRIOR TO CONSTRUCTION OF THE APPROACH SLAB.

TEMPORARY DRAINAGE DETAIL

BILL OF MATERIAL

APPROACH SLAB AT EB #1

BAR	NO.	SIZE	TYPE	LENGTH	WEIGHT
✻ A1	13	#4	STR	17'-3" ✻✻	150
A2	13	#4	STR	17'-3" ✻✻	150
✻ A3	13	#4	STR	9'-0" ✻✻	78
A4	13	#4	STR	9'-0" ✻✻	78
✻ B1	46	#5	STR	11'-1"	532
B2	46	#6	STR	11'-7"	800
REINFORCING STEEL				LBS.	1028
✻ EPOXY COATED REINFORCING STEEL				LBS.	760
CLASS AA CONCRETE				C.Y.	13.7

APPROACH SLAB AT EB #2

BAR	NO.	SIZE	TYPE	LENGTH	WEIGHT
✻ A1	13	#4	STR	17'-3" ✻✻	150
A2	13	#4	STR	17'-3" ✻✻	150
✻ A3	13	#4	STR	9'-0" ✻✻	78
A4	13	#4	STR	9'-0" ✻✻	78
✻ B1	46	#5	STR	11'-1"	532
B2	46	#6	STR	11'-7"	800
REINFORCING STEEL				LBS.	1028
✻ EPOXY COATED REINFORCING STEEL				LBS.	760
CLASS AA CONCRETE				C.Y.	13.7

✻✻ MECHANICAL COUPLERS ARE REQUIRED. ADJUST BAR LENGTHS AS NECESSARY FOR THE APPROVED SPLICE MECHANISM USED. FOR MECHANICAL SPLICES, SEE SECTION 425-5(B) OF THE STANDARD SPECIFICATIONS.

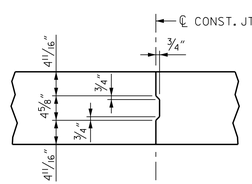

CONSTRUCTION JOINT DETAIL

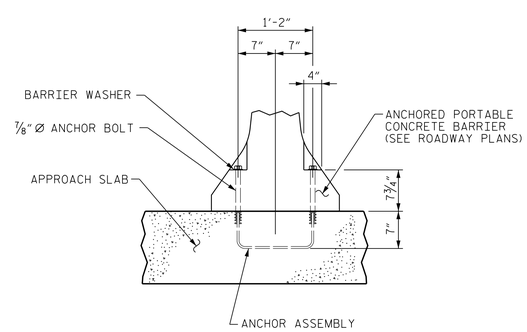

ANCHOR ASSEMBLY PLACEMENT DETAIL

(SHOWING PLACEMENT OF ANCHOR ASSEMBLY)

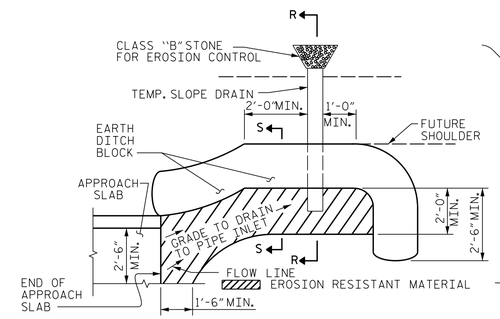

NOTE: IMMEDIATELY AFTER THE CONSTRUCTION OF THE APPROACH SLAB, THE CONTRACTOR SHALL PROVIDE TEMPORARY BERM AND SLOPE DRAIN. CONTRACTOR SHALL GRADE TO PIPE INLET AND PROVIDE EROSION RESISTANT MATERIAL AS SHOWN. THE EROSION RESISTANT MATERIAL SHALL BE EITHER 1) ASPHALT PLANT MIX, TYPE 1 OR TYPE 2, MIN. 2" DEPTH, 2) EROSION CONTROL MAT, OR 3) CONCRETE, AS DIRECTED BY THE ENGINEER. THE SLOPE DRAIN SHALL CONSIST OF A NON-PERFORATED TEMPORARY DRAINAGE PIPE, 12 INCHES IN DIAMETER.

PLAN VIEW

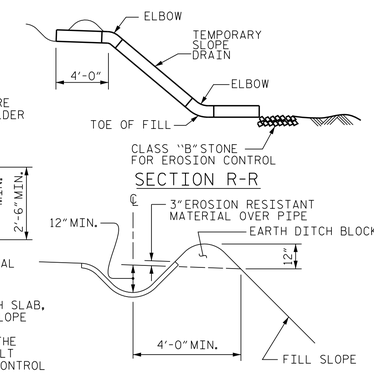

TEMPORARY BERM AND SLOPE DRAIN DETAILS

(TO BE USED WHEN SHOULDER BERM GUTTER IS REQUIRED)

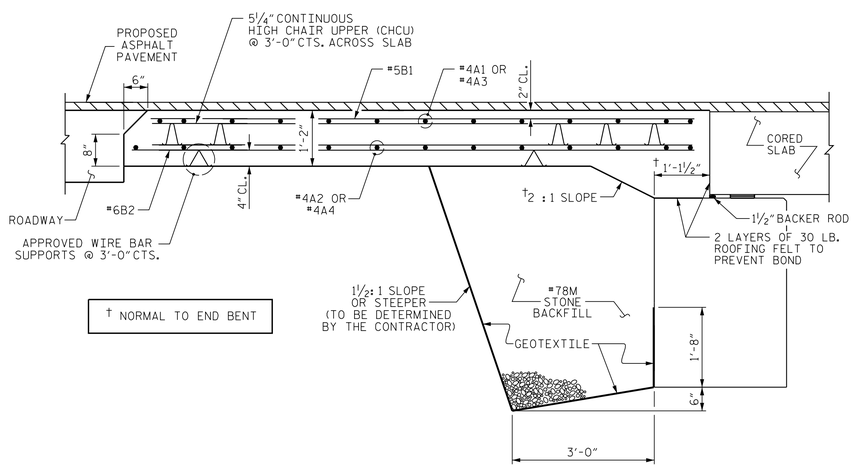

† NORMAL TO END BENT

SECTION THRU SLAB

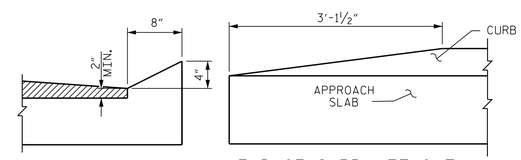

SECTION N-N

END OF CURB WITHOUT SHOULDER BERM GUTTER

CURB DETAILS

PROJECT NO. 17BP.14.R.62

JACKSON COUNTY

STATION: 13+09.50 -L-

ASSEMBLED BY :	MTB	DATE :	06/16
CHECKED BY :	JCM	DATE :	06/16
DRAWN BY : SHS/MAA	5-09	REV. 9-15	MAA/TMG
CHECKED BY : BCH	5-09		

AECOM
AECOM TECHNICAL SERVICES, INC.
701 CORPORATE CENTER DRIVE, SUITE 475
RALEIGH, NC 27607
(919) 854-6200 www.aecom.com
AECOM License No. F-0342

7/5/2016

NORTH CAROLINA PROFESSIONAL SEAL 030474 ENGINEER JOHN C. MORRISON

DOCUMENT NOT CONSIDERED FINAL UNLESS ALL SIGNATURES COMPLETED

STATE OF NORTH CAROLINA
DEPARTMENT OF TRANSPORTATION
RALEIGH

BRIDGE APPROACH SLAB FOR PRESTRESSED CONCRETE CORED SLAB UNIT (SUB-REGIONAL TIER) 120° SKEW

REVISIONS							SHEET NO.
NO.	BY:	DATE:	NO.	BY:	DATE:		S-18
1			3				TOTAL SHEETS
2			4				

MODIFIED STD. NO. BAS.27.1205

USER: morrisonc
DGN: GA6023B72v400_Tech_Info_Disc_Files\450_NCDOT Std Tech Doc Files\BRG_J35\Structures\40_095_B135_S18_AS.dgn
DATE: 7/15/2016 TIME: 4:05:42 PM
DATE: 7/15/2016 TIME: 4:05:41 PM