DocuSign Envelope ID: 417F13A2-7A3B-4EA8-A2E0-83C88D96BF3E

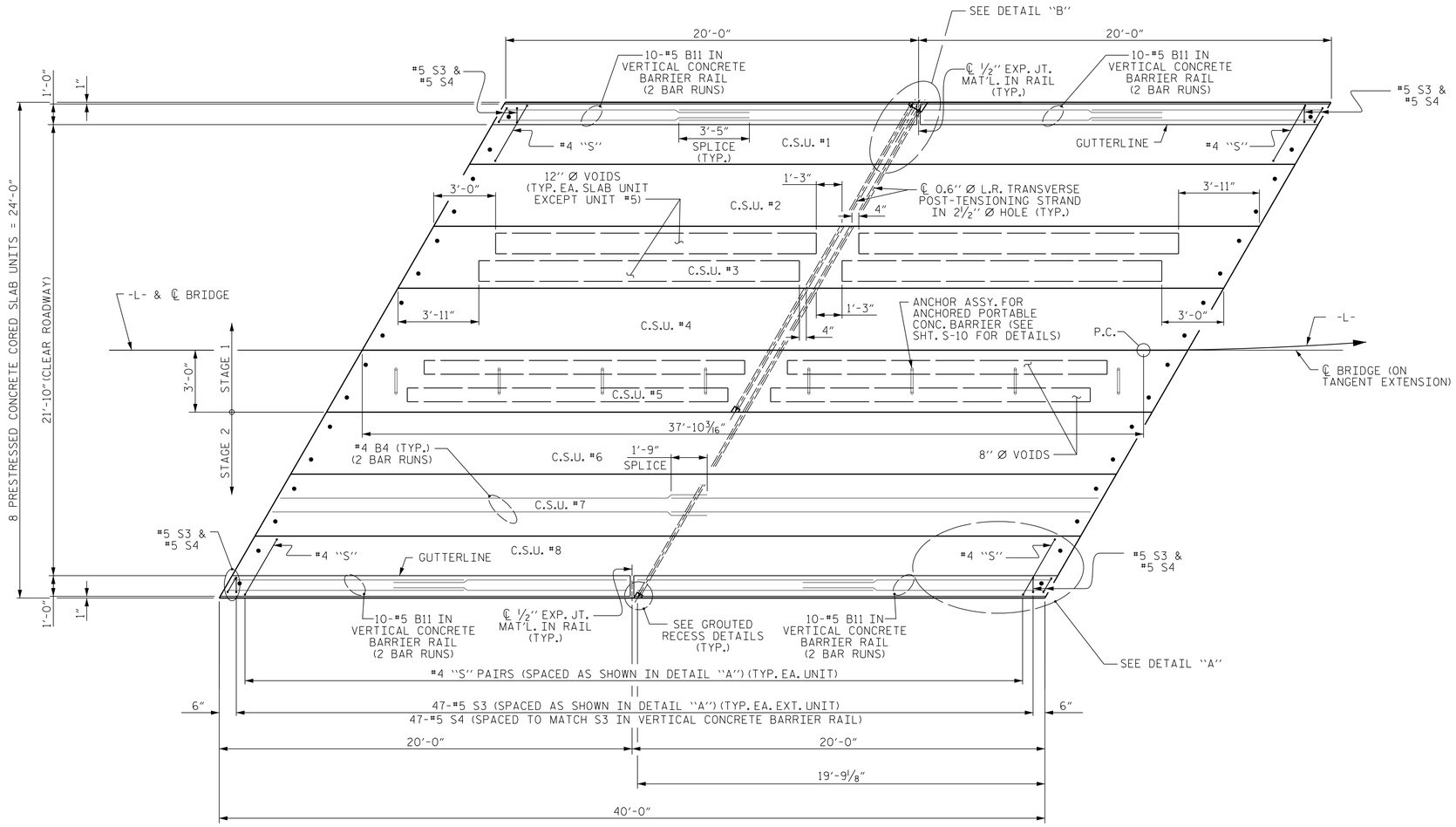

PLAN OF UNIT

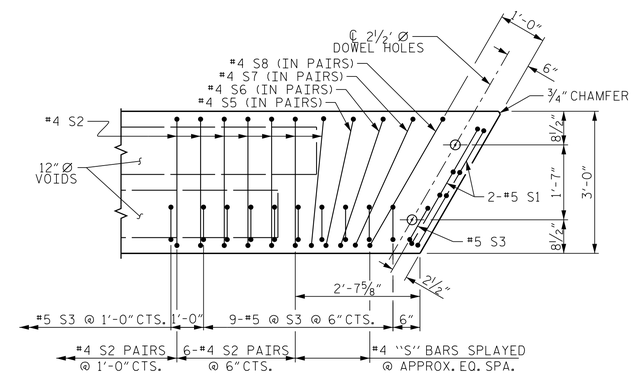

DETAIL "A"

NOTE: EXTERIOR UNIT SHOWN - INTERIOR UNIT SIMILAR EXCEPT OMIT #5 S3 BARS.

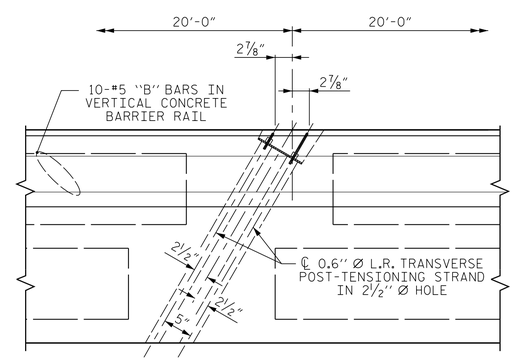

DETAIL "B"

#4 S11 BARS MAY BE SHIFTED AS NECESSARY TO MAINTAIN 1" CLEAR TO GROUTED RECESS AND 2 1/2" Ø TRANSVERSE POST-TENSIONING STRAND HOLES

PROJECT NO. 17BP.14.R.62

JACKSON COUNTY

STATION: 13+09.50 -L-

SHEET 2 OF 4

AECOM
AECOM TECHNICAL SERVICES, INC.
701 CORPORATE CENTER DRIVE, SUITE 475
RALEIGH, NC 27607
(919) 854-6200 www.aecom.com
AECOM License No. F-0342

7/5/2016

NORTH CAROLINA PROFESSIONAL SEAL 030474 ENGINEER JOHN C. MORRISON

STATE OF NORTH CAROLINA
DEPARTMENT OF TRANSPORTATION
RALEIGH

PLAN OF 40' UNIT
21'-10" CLEAR ROADWAY
120° SKEW

REVISIONS						SHEET NO.
NO.	BY:	DATE:	NO.	BY:	DATE:	S-09
1			3			TOTAL SHEETS
2			4			

ASSEMBLED BY :	MTB	DATE :	06/16
CHECKED BY :	JCM	DATE :	06/16
DRAWN BY : DGE	5/09	REV. 12/5/11	MAA/AAC
CHECKED BY: BCH	6/09	REV. 8/14	MAA/TMG

DOCUMENT NOT CONSIDERED FINAL UNLESS ALL SIGNATURES COMPLETED

MODIFIED STD. NO. 21"PCS_27_120S_40L

USER: mcarlsone
DGN: QA6023BT12\400_Tech_Info_Disc_Files\450_NCDOT Std Tech Desc Files\DRG_I35\Structures\401_050_BI35_S09_PCS02.dgn

DATE: 7/5/2016
TIME: 3:58:55 PM