DocuSign Envelope ID: 417F13A2-7A3B-4EA8-A2E0-83C88D96BF3E

TIP PROJECT: 17BP.14.R.62

STATE OF NORTH CAROLINA
DIVISION OF HIGHWAYS

STATE	STATE PROJECT REFERENCE NO.	SHEET NO.	TOTAL SHEETS
N.C.	17BP.14.R.62	TS-01	

STATE PROJ. NO.	F.A. PROJ. NO.	DESCRIPTION
17BP.14.R.62		PE, R/W
17BP.14.R.62		CONST

DOCUMENT NOT CONSIDERED FINAL UNLESS ALL SIGNATURES COMPLETED

JACKSON COUNTY

LOCATION: BRIDGE NO. 135 OVER MOSES CREEK ON SR 1740 (MOSES CREEK RD)

TYPE OF WORK: GRADING, DRAINAGE, PAVING AND STRUCTURE

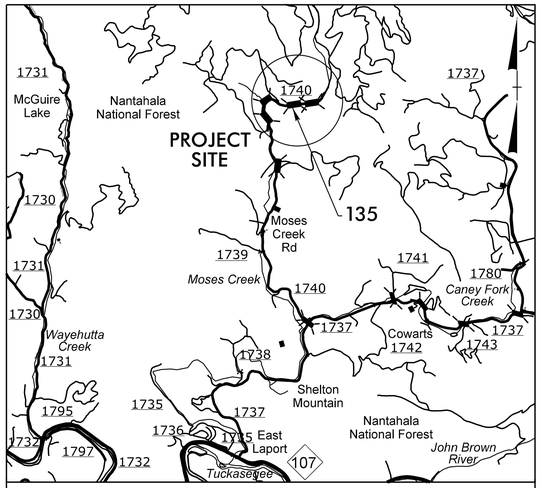

VICINITY MAP

STRUCTURE

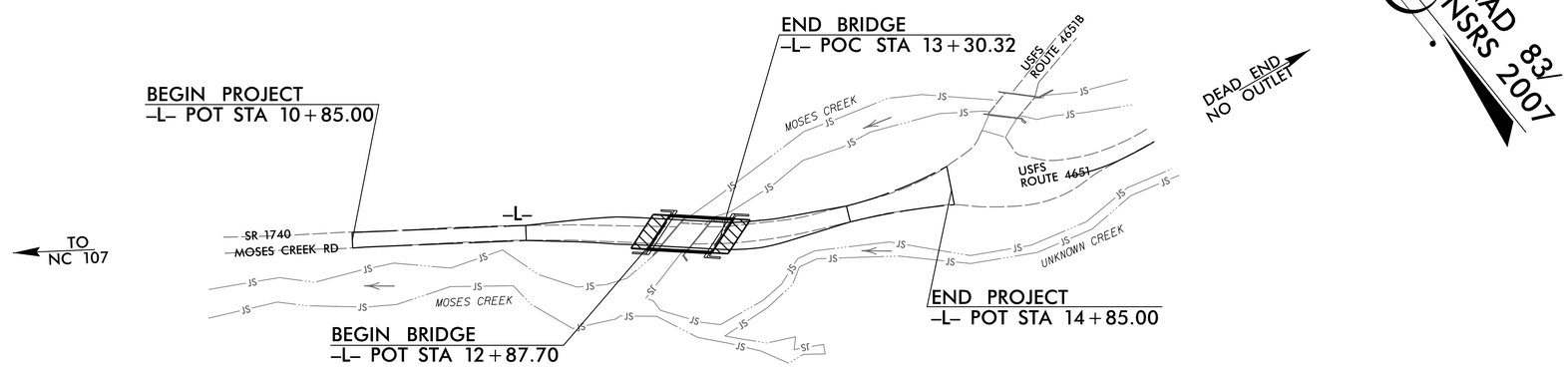

CLEARING ON THIS PROJECT SHALL BE PERFORMED TO THE LIMITS ESTABLISHED BY METHOD III.
THIS PROJECT IS NOT WITHIN ANY MUNICIPAL BOUNDARIES.

CONTRACT:

DESIGN DATA

ADT XXXX = XXX
V = 20 MPH
FUNC CLASS = LOCAL
SUB-REGIONAL TIER

PROJECT LENGTH

LENGTH ROADWAY STATE PROJECT 17BP.14.R.62 = 0.068 MILES
LENGTH STRUCTURES STATE PROJECT 17BP.14.R.62 = 0.008 MILES
TOTAL LENGTH STATE PROJECT 17BP.14.R.62 = 0.076 MILES

NCDOT CONTACT: JOSHUA DEYTON, PE
PROJECT ENGINEER

Prepared in the Office of:
AECOM
NC FIRM LICENSE No: F-0342
701 Corporate Center Drive, Suite 475
Raleigh, NC 27607
(919) 854-6200 - (919) 854-6259(FAX)

2012 STANDARD SPECIFICATIONS

RIGHT OF WAY DATE: AUGUST 2, 2012
LETTING DATE: JULY 2016

LEN HILL, PE
PROJECT ENGINEER

LEN HILL, PE
PROJECT DESIGN ENGINEER

BRIDGE ENGINEER
7/5/2016
JOHN C. MORRISON P.E.
SIGNATURE:

DIVISION OF HIGHWAYS
STATE OF NORTH CAROLINA

P.E.
STATE HIGHWAY DESIGN ENGINEER

7/5/2016
Q:\60238772\400_Tech_Info_Disc_Files\450_NCDOTStdTechDesFiles\BRG_135\Structures\401_005_B135_S00_TS.dgn
morrisonc