DocuSign Envelope ID: 417F13A2-7A3B-4EA8-A2E0-83C88D96BF3E

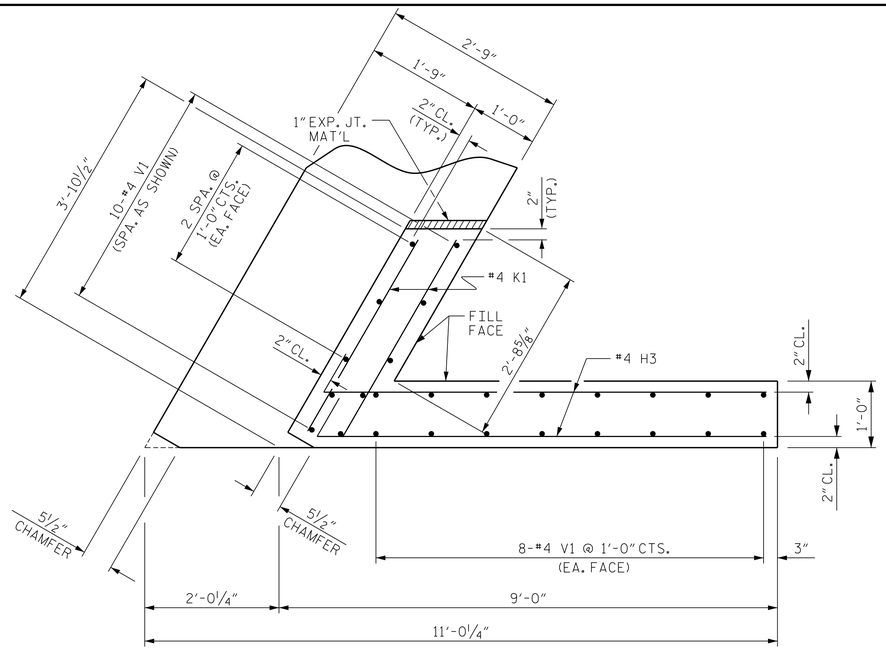

PLAN OF WING (W1)

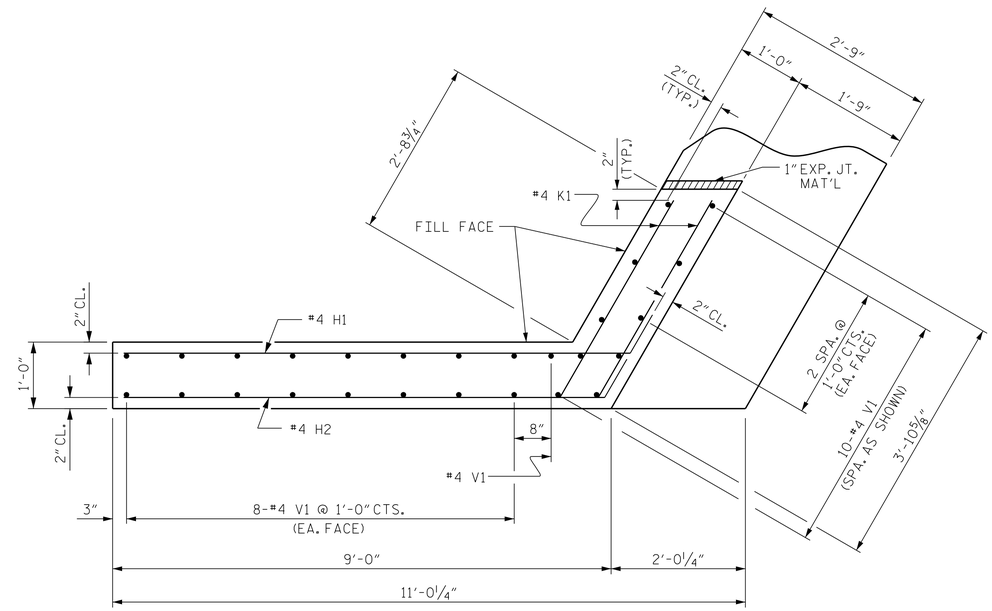

PLAN OF WING (W2)

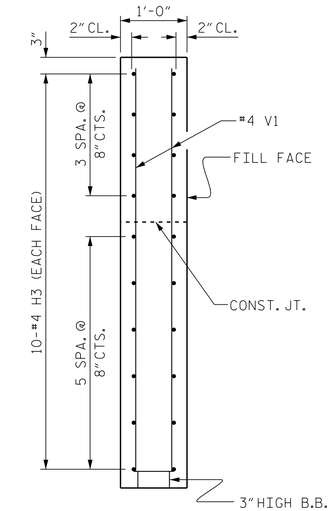

SECTION X-X

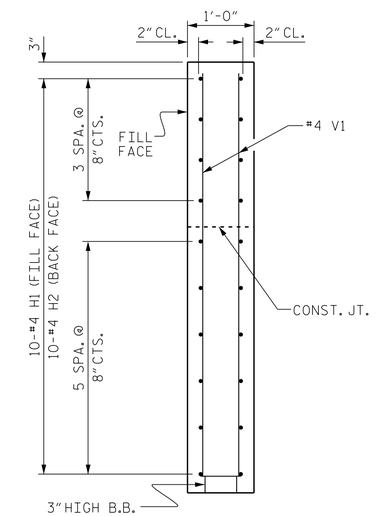

SECTION Y-Y

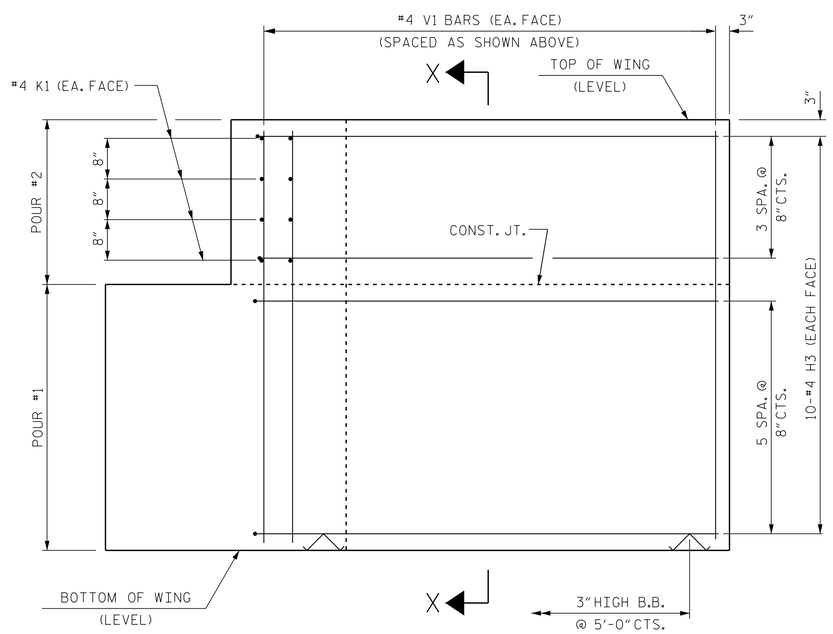

ELEVATION OF WING (W1)

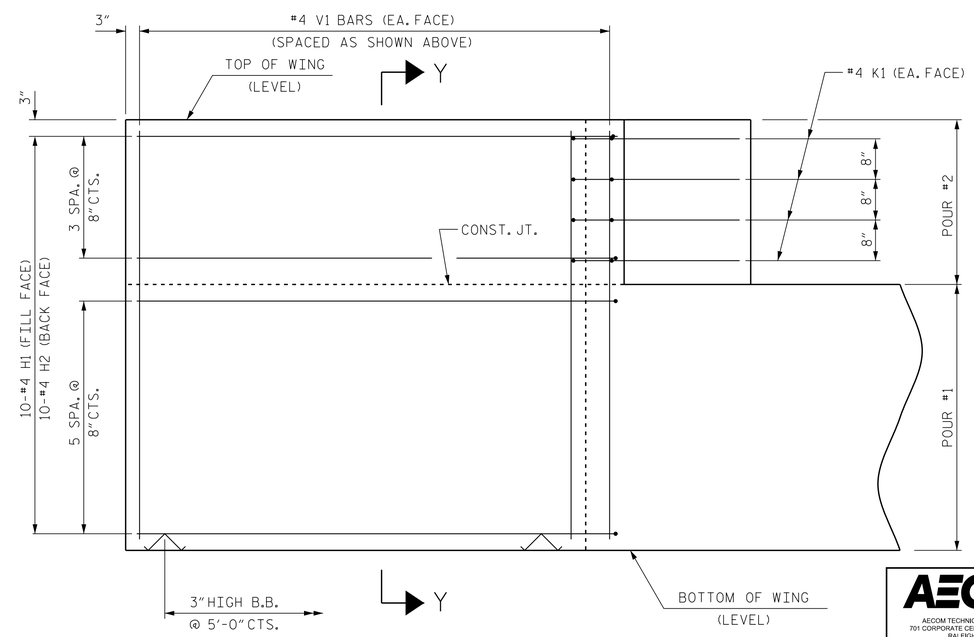

ELEVATION OF WING (W2)

WING DETAILS

PROJECT NO. 17BP.14.R.62

JACKSON COUNTY

STATION: 13+09.50 -L-

SHEET 3 OF 4

AECOM
AECOM TECHNICAL SERVICES, INC.
701 CORPORATE CENTER DRIVE, SUITE 475
RALEIGH, NC 27607
(919) 854-6200 www.aecom.com
AECOM License No. F-0342

7/5/2016

NORTH CAROLINA PROFESSIONAL SEAL 030474 ENGINEER JOHN C. MORRISON

John C. Morrison

A2FDE142C82F4AB...

STATE OF NORTH CAROLINA
DEPARTMENT OF TRANSPORTATION
RALEIGH

SUBSTRUCTURE
END BENT
WING DETAILS

REVISIONS							
NO.	BY:	DATE:	NO.	BY:	DATE:	SHEET NO.	S-15
1			3			TOTAL SHEETS	
2			4				

DOCUMENT NOT CONSIDERED FINAL UNLESS ALL SIGNATURES COMPLETED

ASSEMBLED BY :	MTB	DATE :	06/16
CHECKED BY :	JCM	DATE :	06/16
DRAWN BY : WJH	12/11	REV. 4/15	MAA/TMG
CHECKED BY : AAC	12/11		

STD. NO. EB_27_120S4

DATE: 7/5/2016
TIME: 4:03:31 PM
USER: morrisonc
DGN: Q:\60123817\2400_Tech_Info_Disc_Files\450_NCDOT STaff extDesFiles\BRG_135\Structures\401_080_B135_515_EB03.dgn