DocuSign Envelope ID: 417F13A2-7A3B-4EA8-A2E0-83C88D96BF3E

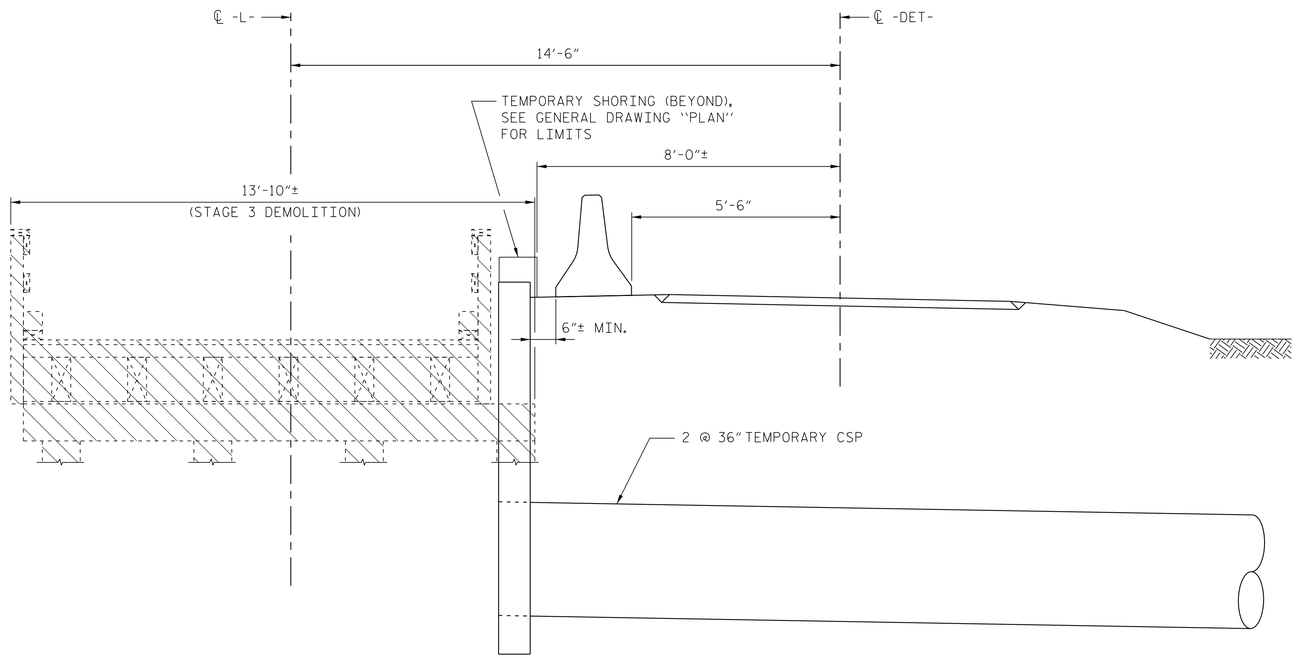

STAGE 3

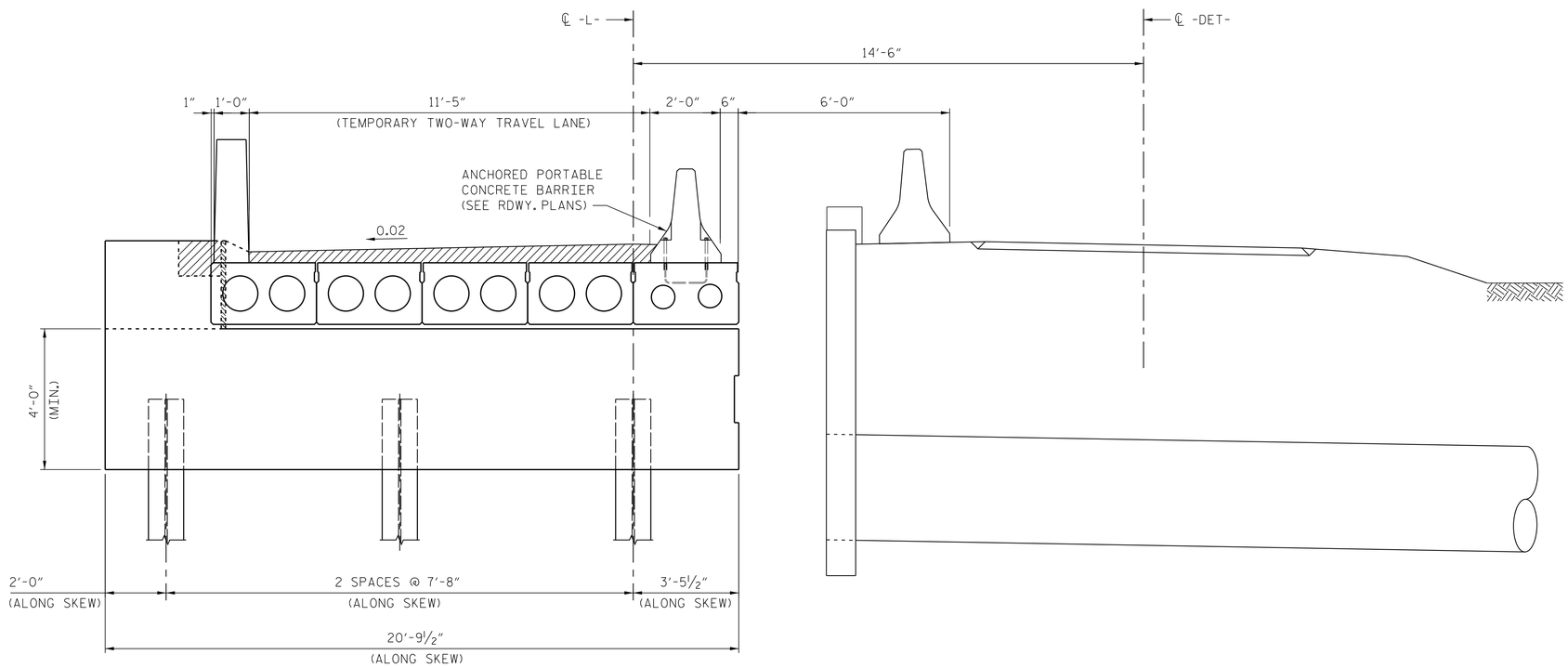

STAGE 4

PROJECT NO. 17BP.14.R.62

JACKSON COUNTY

STATION: 13+09.50 -L-

SHEET 2 OF 4

AECOM
AECOM TECHNICAL SERVICES, INC.
701 CORPORATE CENTER DRIVE, SUITE 475
RALEIGH, NC 27607
(919) 854-6200 www.aecom.com
AECOM License No. F-0342

7/5/2016

NORTH CAROLINA PROFESSIONAL SEAL 030474 ENGINEER JOHN C. MORRISON

DocuSigned by: John C. Morrison
A2FDE142C82F4AB...

STATE OF NORTH CAROLINA
DEPARTMENT OF TRANSPORTATION
RALEIGH

BRIDGE CONSTRUCTION STAGING FOR MAINTENANCE OF TRAFFIC

REVISIONS						SHEET NO.
NO.	BY:	DATE:	NO.	BY:	DATE:	S-05
						TOTAL SHEETS

DOCUMENT NOT CONSIDERED FINAL UNLESS ALL SIGNATURES COMPLETED

DRAWN BY :	MTB	DATE :	06/16
CHECKED BY :	JCM	DATE :	06/16

DATE: 7/5/2016
TIME: 3:56:50 PM

USER: morrisonc
DGN: G:\60238172\400_Tech_Info_Disc_Files\450_NCDOT\Staff\eng\DesFiles\BRG_135\Structures\40_030_B135_505_SE002.dgn